REVISION RECORD			
LTR	ECO NO:	APPROVED:	DATE:

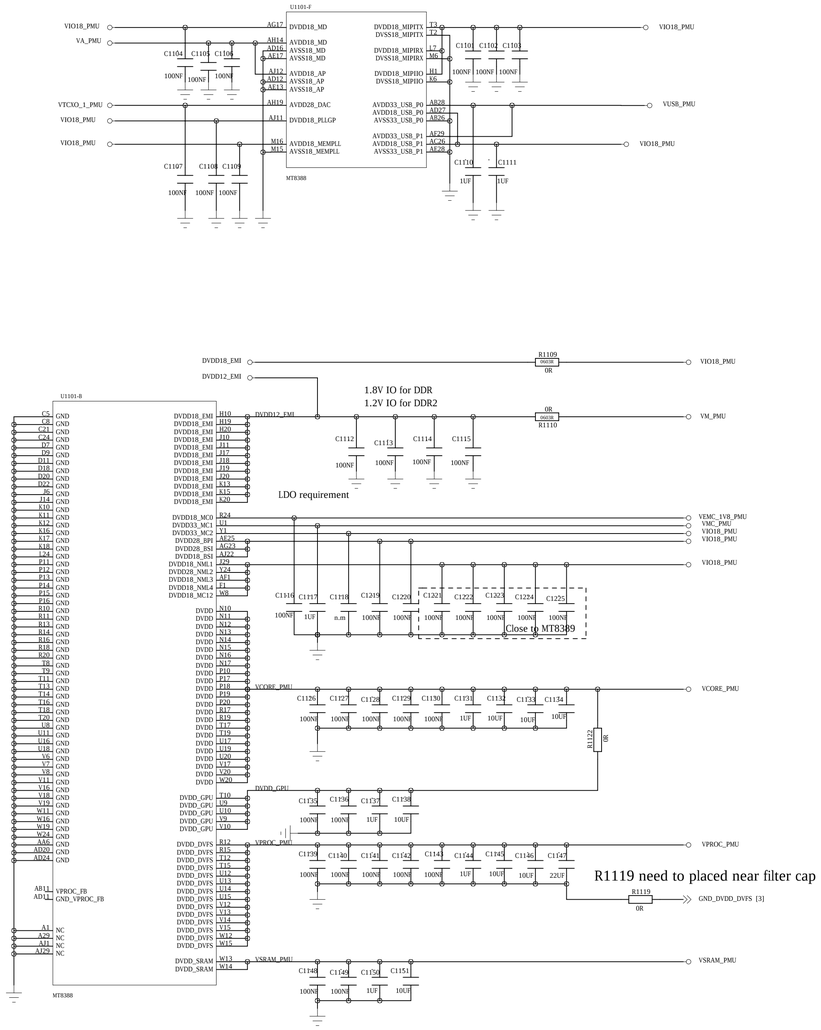

MT8389 Power supply input

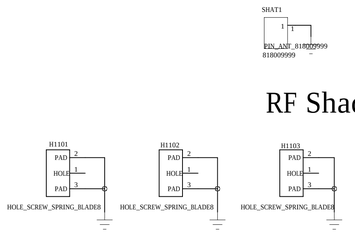

RF Shading Connector

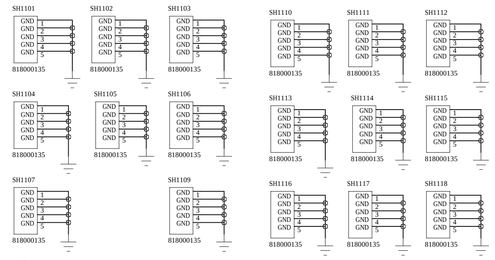

Shielding Pin

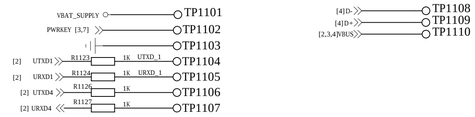

Test Point For factury Build

DRAWN:	DATED:	COMPANY:			
		TITLE:			
CHECKED:	DATED:	CODE:	SIZE:	DRAWING NO:	REV:
QUALITY CONTROL:	DATED:				
RELEASED:	DATED:	SCALE:		SHEET: OF	

REVISION RECORD			
LTR	ECO NO:	APPROVED:	DATE:

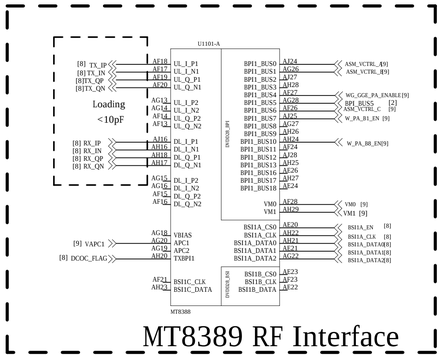

MT8389 RF Interface

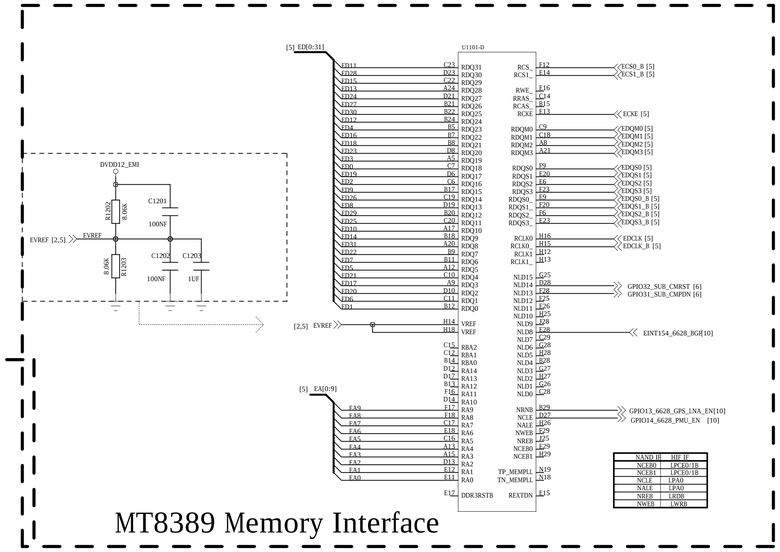

MT8389 Memory Interface

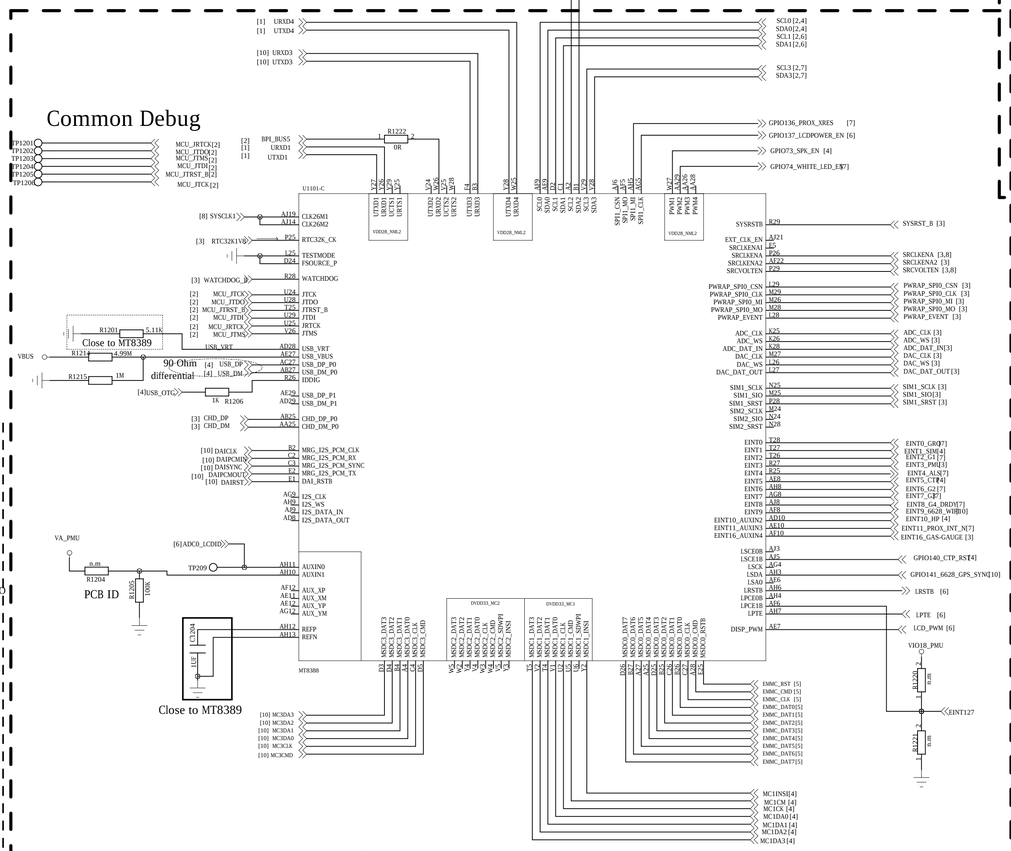

MT8389 General Interface and GPIO

EINT0 : Reserved
EINT1 : P-Sensor
EINT2 : G-sensor
EINT3 : PMIC
EINT4 : Reserved
EINT5 : CTP
EINT6 : G-sensor
EINT7 : Reserved
EINT8 : Reserved
EINT9 : MT6620 BGF
EINT11 : Reserved
EINT16 : Reserved

PWM1 : GPIO
PWM2 : GPIO
PWM3 : GPIO
PWM4 : GPIO

UART1: Debug
UART2: GPIO_BSI2 (2nd Talk)
UART3: MT6628
UART4: Debug

I2C0 : CTP
I2C1 : Main Camera / Sub Camera
I2C2 : Main 3D Camera
I2C3 : G/M/GYRO/ALS sensor
I2C4 (PMIC) : MHL
I2C5 (PMIC) : NFC
I2C6 (PMIC) : Charger, T sensor
@ 3D Camera need to use I2C1/I2C2

I2S : MHL

MSDC0 : eMMC
MSDC1 : T-Card
MSDC2 : GPIO_BPI2 (2nd Talk)
MSDC3 : MT6628

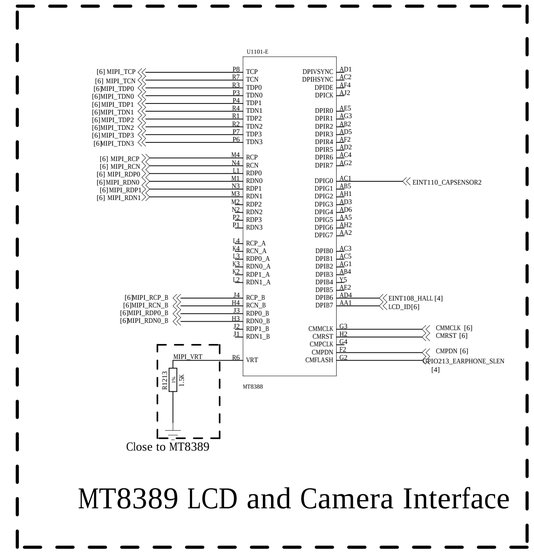

MT8389 LCD and Camera Interface

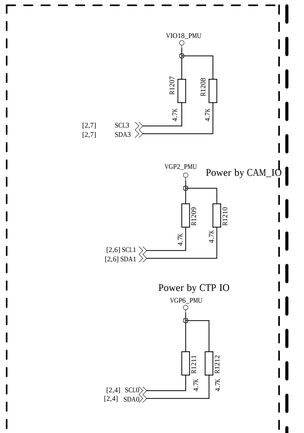

MT8389 I2C pull up res

COMPANY:			
TITLE:			
DRAWN:	DATED:		
CHECKED:	DATED:	CODE:	SIZE:	DRAWING NO:	REV:
QUALITY CONTROL:	DATED:		
RELEASED:	DATED:	SCALE:	SHEET: OF

REVISION RECORD			
LTR	ECO NO:	APPROVED:	DATE:

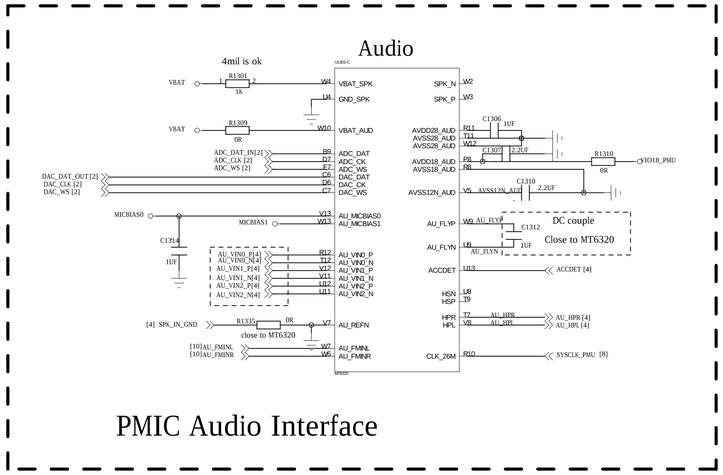

PMIC Audio Interface

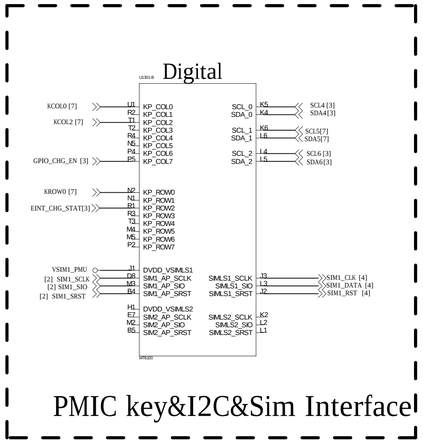

PMIC key&I2C&Sim Interface

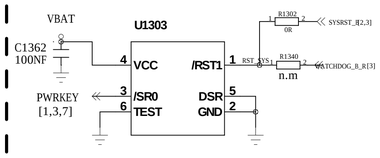

Reset IC

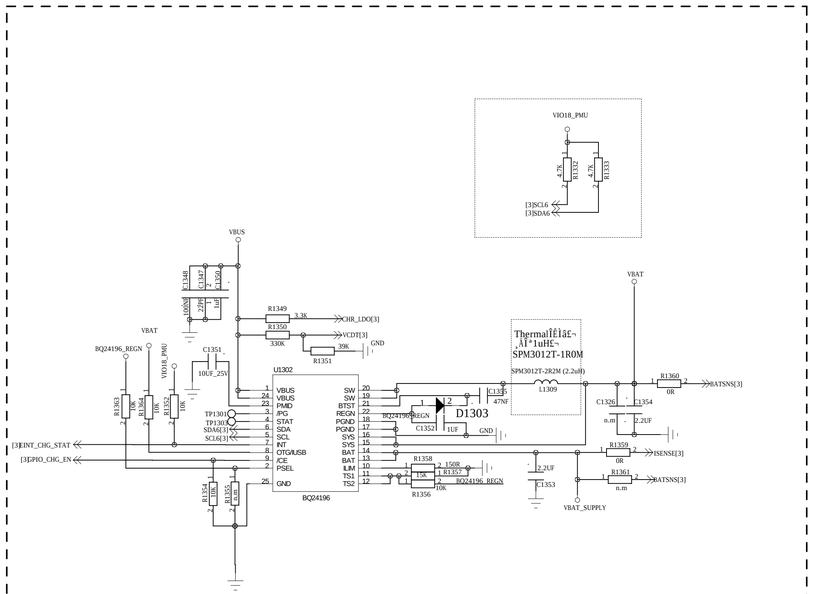

Switch Charging cicuit

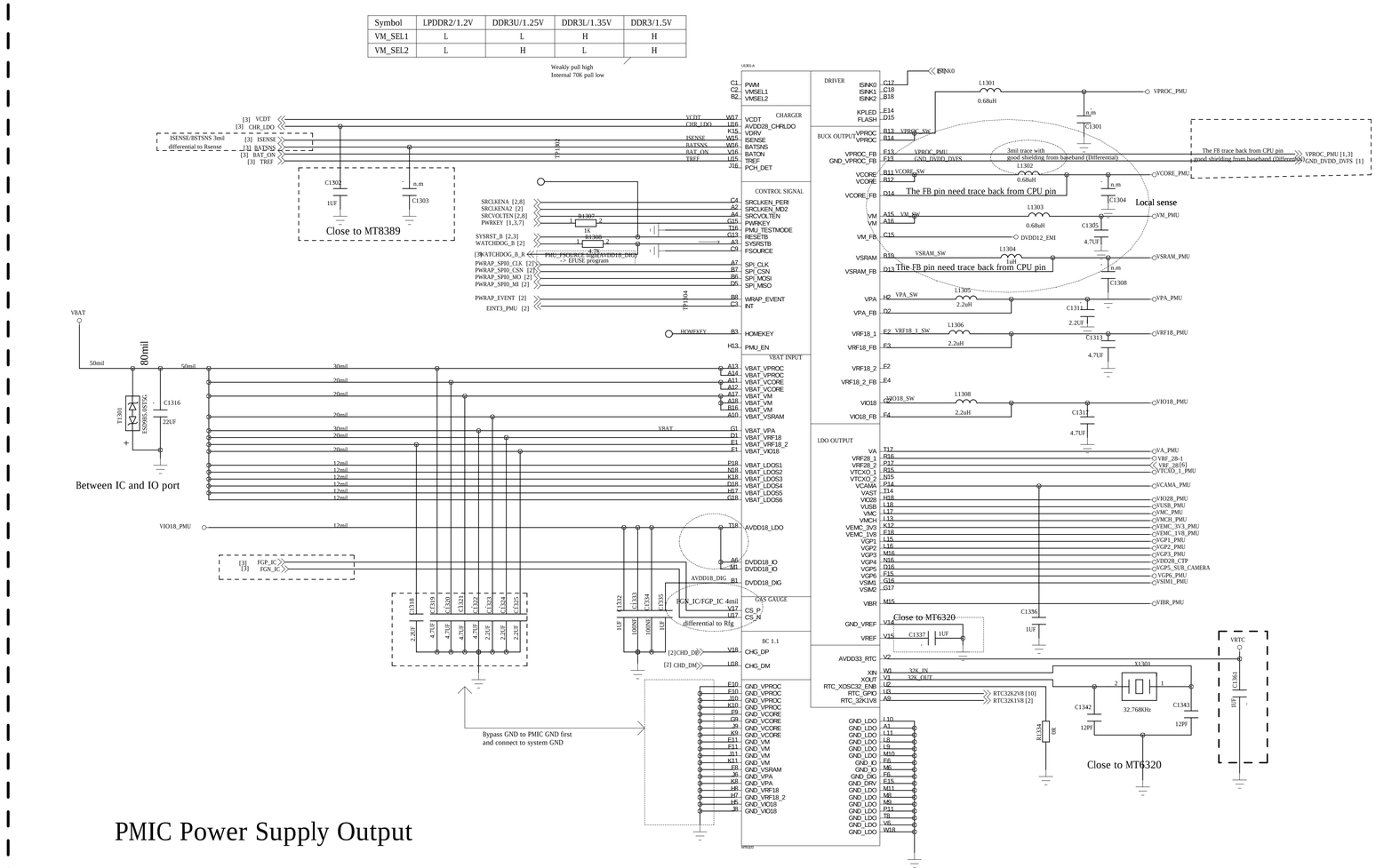

PMIC Power Supply Output

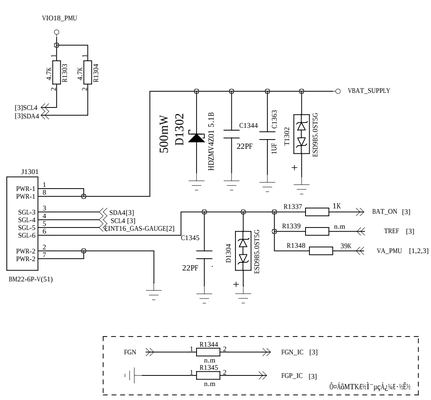

Battery connector

µç³ØÅ¬½Ó£÷·½ÏòÅ»¶¨

	Symbol	Application	Vout (V)	Iout (mA)
Buck	VPROC	CPU	0.7~1.4 (DC/DC+PTP)	2000
	VCORE	MDSYS/Infra	0.7~1.4 (DC/DC)	1200
	VM	VM	1.2/1.35/1.5	1100
	VSRAM	Memory	0.7~1.4 (DC/DC+PTP)	600
	VPA	3GPA	0.5~3.4 (50mV/step)	600
	VRF18	1st RF	1.825	300
	VRF18_2	2nd RF GPU OD	1.825 1.05~1.25 (500mV/step)	450
	VIO18	IO App.	1.8	600
Analog LDO	VA	ABB	1.8/2.5	60
	VA28	Audio Block	2.8	40
	VRF28_1	MDSYS	2.85	200
	VRF28_2	General	1.8/2.85	200
	VTCXO_1	MDSYS	2.8	40
	VTCXO_2	MDSYS	1.8/2.8	40
	VCAMA	VCAMA	1.5/1.8/2.5/2.8	200
Digital LDO	VIO28		2.8	400
	VAST	LVDS bridge	0.9/1.0/1.1/1.2	300
	VUSB		3.3	200
	VMC	T-Card	1.8/3.3	200
	VMCH	T-Card	3.0/3.3	800
	VEMC_3V3	eMMC (Core)	3.0/3.3	800
	VEMC_1V8	eMMC	1.2/1.3/1.5/1.8/2.5/2.8/3.0/3.3	200
	VGP1	VCAMD	1.2/1.3/1.5/1.8/2.5/2.8/3.0/3.3	400
	VGP2	VCAM_IO	1.2/1.3/1.5/1.8/2.5/2.8/3.0/3.3	200
	VGP3	VCAM_AF	1.2/1.3/1.5/1.8/2.5/2.8/3.0/3.3	200
	VGP4	CTP/CMMB	1.2/1.3/1.5/1.8/2.5/2.8/3.0/3.3	200
	VGP5	CTP/CMMB	1.2/1.3/1.5/1.8/2.5/2.8/3.0/3.3	200
	VGP6	CTP/CMMB	1.2/1.3/1.5/1.8/2.5/2.8/3.0/3.3	200
	VSIM1	VSIM1	1.2/1.3/1.5/1.8/2.5/2.8/3.0/3.3	200
	VSIM2	VSIM2	1.2/1.3/1.5/1.8/2.5/2.8/3.0/3.3	200
Vibrator	VIBR	Vibrator	1.2/1.3/1.5/1.8/2.5/2.8/3.0/3.3	200
RTC	VRTC	RTC Block	2.8	

COMPANY:					
TITLE:					
DRAWN:	DATED:				
CHECKED:	DATED:	CODE:	SIZE:	DRAWING NO:	REV:
QUALITY CONTROL:	DATED:				
RELEASED:	DATED:	SCALE:		SHEET: OF	

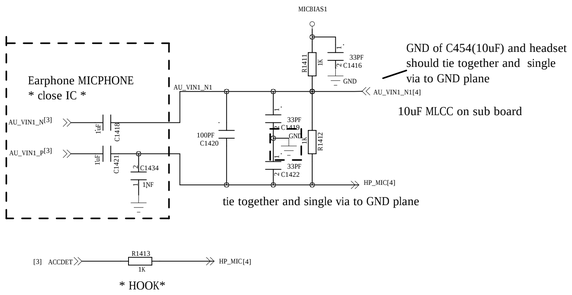

F3.5 Earphone mic

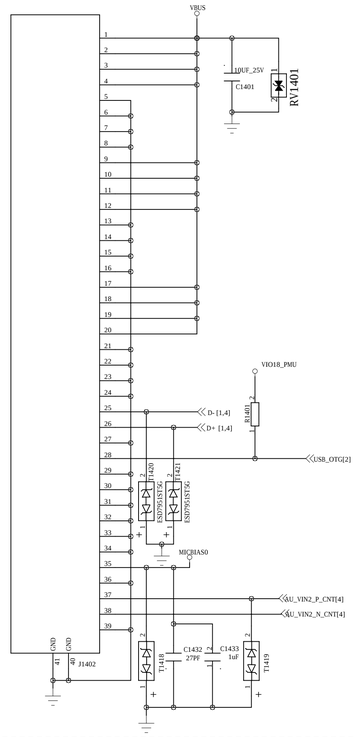

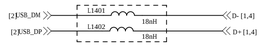

USB&UART1 SW

To FPC1-USB

USB Sub-Mic

¹èÂó °åÏÂÐÍ

KNOWLES

Sub Mic

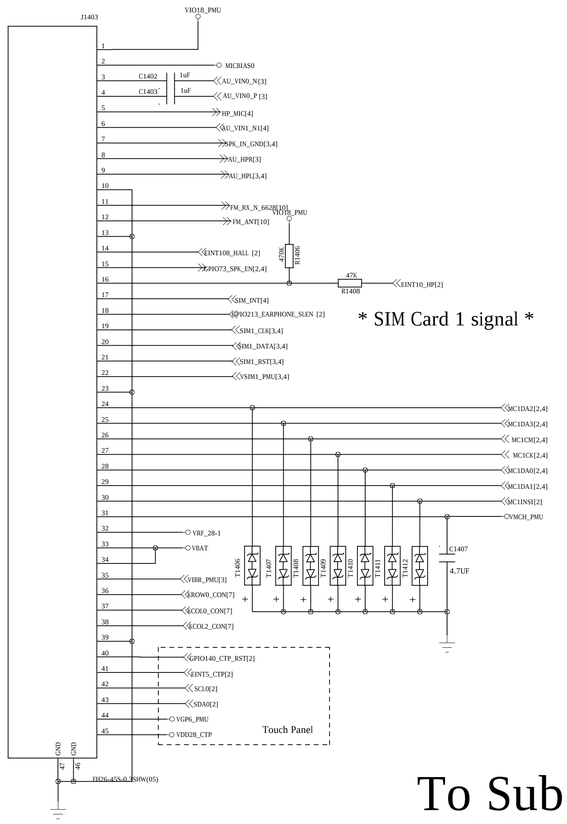

* SIM Card 1 signal *

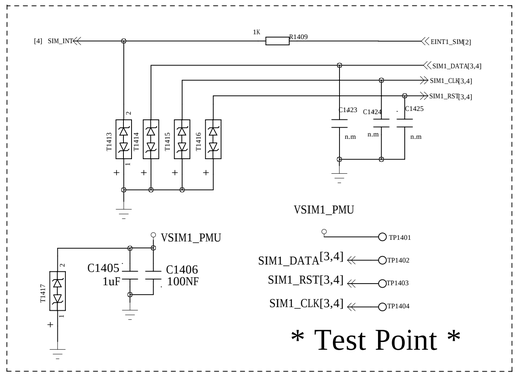

* Test Point *

SD card signal

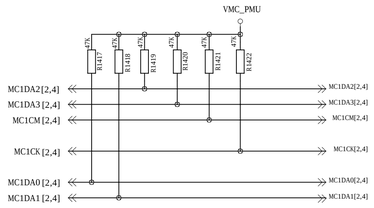

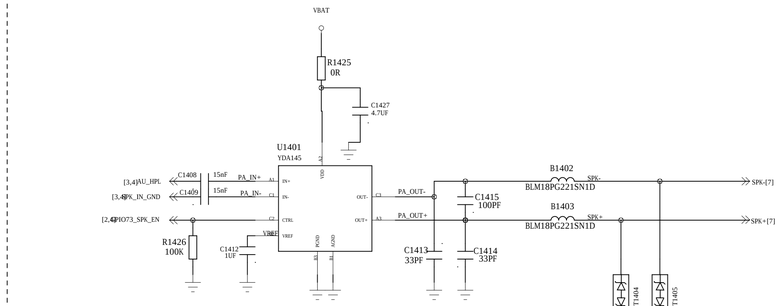

Audio PA

To Sub PCB

Speaker--R Vibrator EarPhone Mic
T-Card SIM-Card TP

REVISION RECORD			
LTR	ECO NO:	APPROVED:	DATE:

DRAWN:	DATED:	COMPANY:		
		TITLE:		
CHECKED:	DATED:	CODE:	SIZE:	DRAWING NO:	REV:
QUALITY CONTROL:	DATED:			
RELEASED:	DATED:	SCALE:	SHEET: OF	

REVISION RECORD			
LTR	ECO NO:	APPROVED:	DATE:

eMMC+LPDDR2

162 Ball, 0.5mm pitch

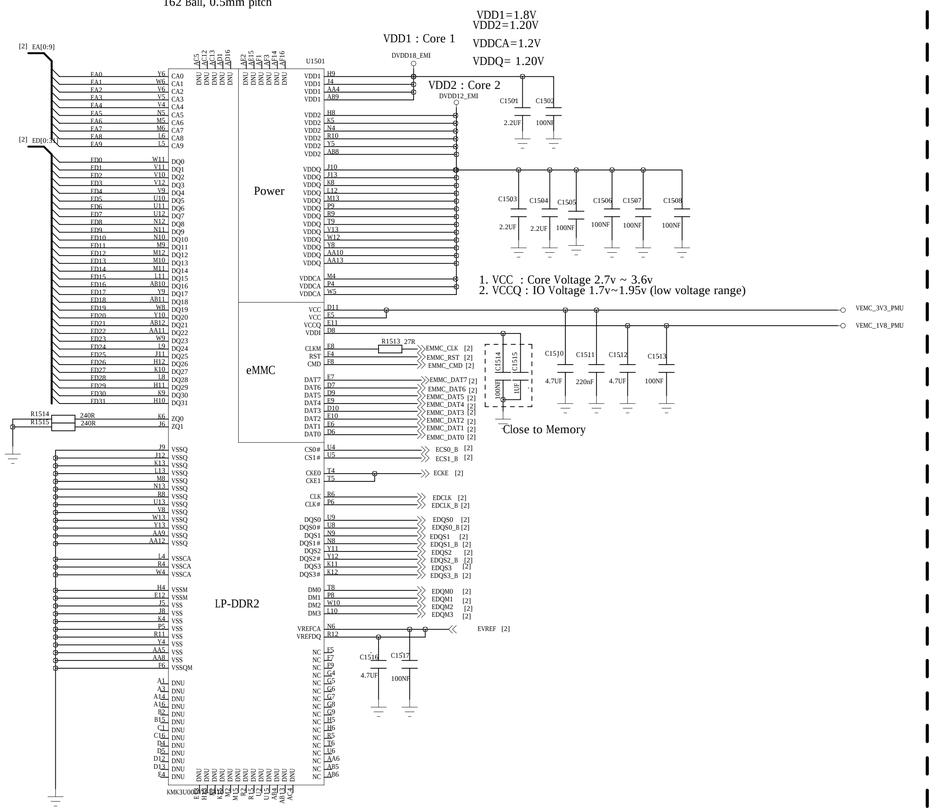

LPDDR2&eMMC MCP, 4G,8G,16G,32G eMMC Compatible

		COMPANY:			
		TITLE:			
DRAWN:	DATED:				
CHECKED:	DATED:	CODE:	SIZE:	DRAWING NO:	REV:
QUALITY CONTROL:	DATED:				
RELEASED:	DATED:	SCALE:		SHEET: OF	

REVISION RECORD			
LTR	ECO NO:	APPROVED:	DATE:

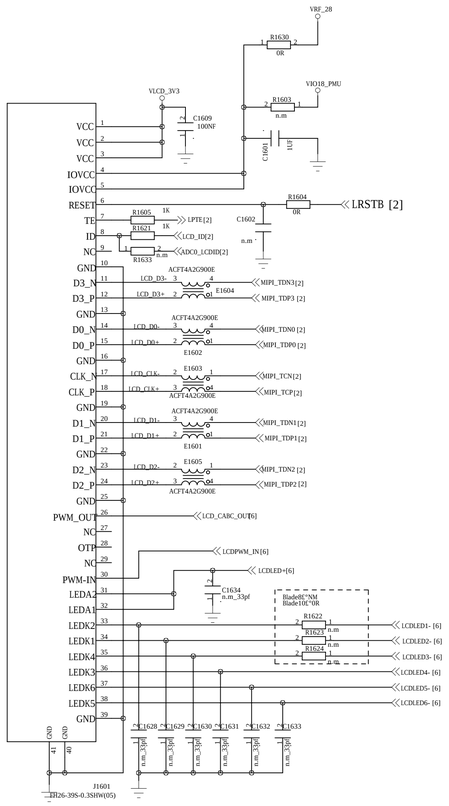

1280*720 LCD interface

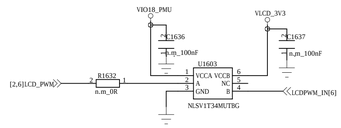

LevelShift For LCD CABC in
Blade8 NM
Blade10 ON

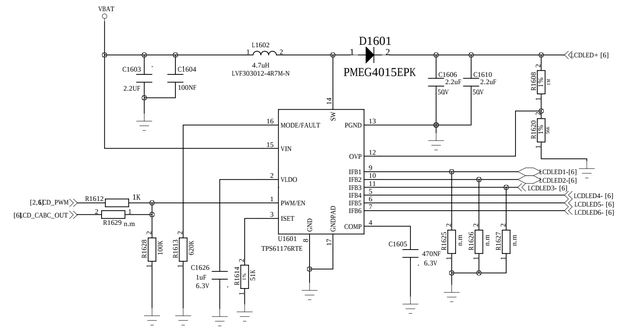

LCD Backlight Drvier IC

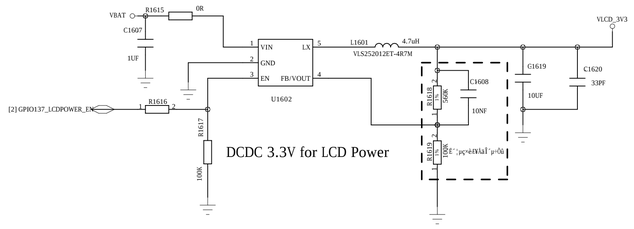

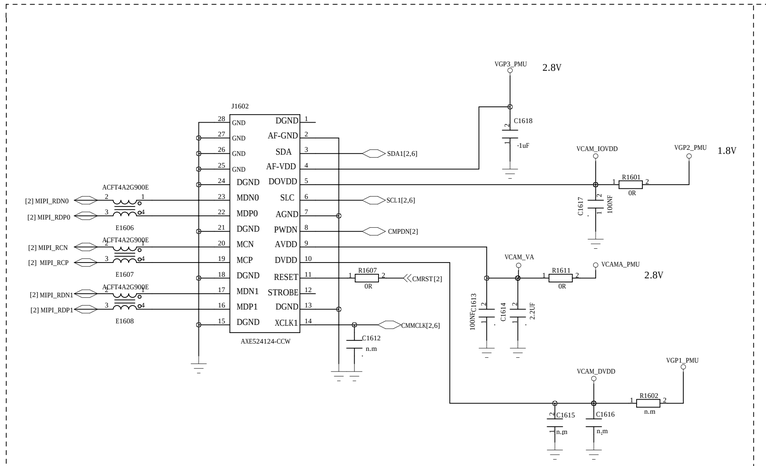

5M Main Camera

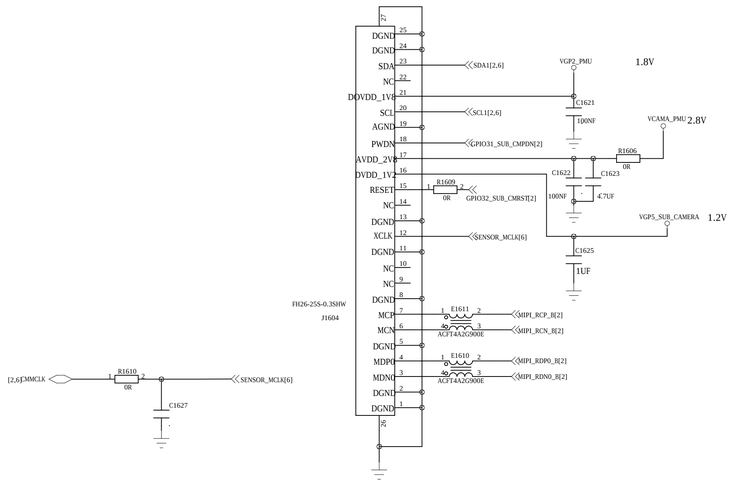

1.6M front Camera
Sensor:OV9760
Module:P1V04B Ë´Óî ·Ç±ê¶¨ÖÆ

DRAWN:	DATED:	COMPANY:			
		TITLE:			
CHECKED:	DATED:	CODE:	SIZE:	DRAWING NO:	REV:
QUALITY CONTROL:	DATED:				
RELEASED:	DATED:	SCALE:		SHEET: OF	

REVISION RECORD			
LTR	ECO NO:	APPROVED:	DATE:

Gyro Sensor

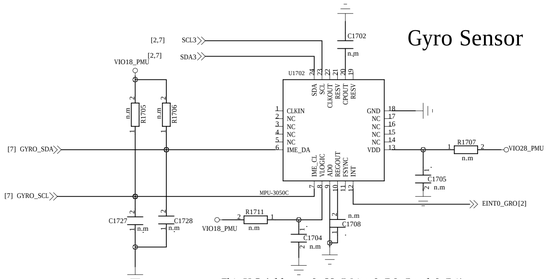

7bit I2C Address: 0x68 (Write:0xD0, Read:0xD1)

ALS

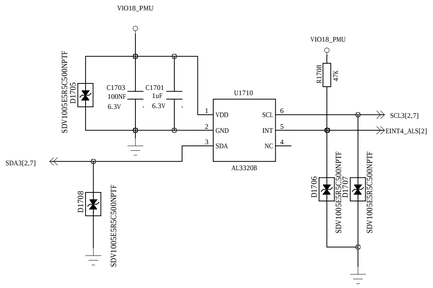

G+M -Sensor

Part number:BMC056

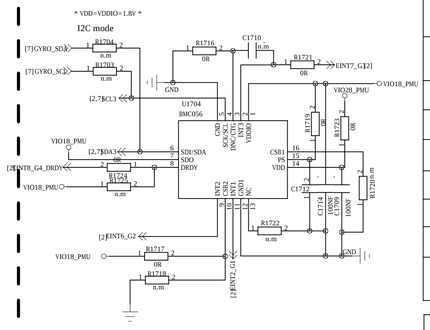

G+M Compatible With BMC056&LSM303D		
	BMC056	LSM303D
C1710	NM	220nF
	0R	NM
	0R	NM
	NM	0R
	NM	4.7uF
	0R	NM
	NM	0R

I2C Address Information		
SDO / CSB2	GND	VDDIO
GND	Shared 0110 Not Recommend for Android	Shared 0111
VDDIO	Accelerometer I2C Address:0110 Magnetometer I2C Address:0112	Accelerometer I2C Address:0111 Magnetometer I2C Address:0113

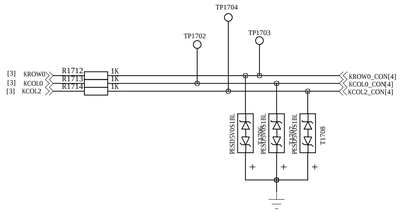

DO NOT put pull-up resistor on PWRKEY
KCOL0+KROW0 USB DL & Volumn UP
KCOL1+KROW0 Volumn Down

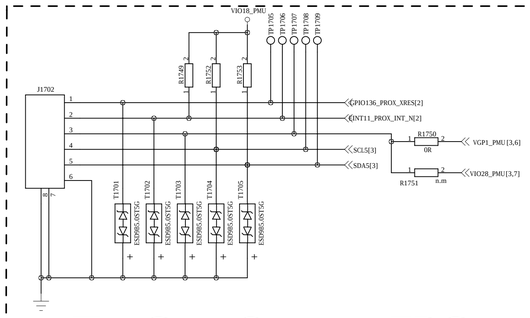

To Cap-Sensor FPC

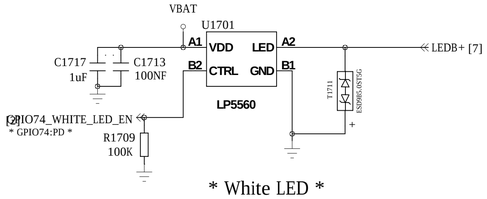

* White LED *

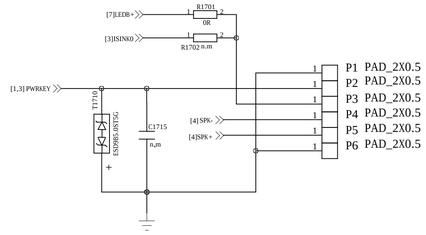

* Connect to PowerKey and LED Shining FPC *

COMPANY:			
TITLE:			
DRAWN:	DATED:		
CHECKED:	DATED:	CODE: / SIZE:	DRAWING NO: / REV:
QUALITY CONTROL:	DATED:		
RELEASED:	DATED:	SCALE:	SHEET: OF

REVISION RECORD			
LTR	ECO NO:	APPROVED:	DATE:

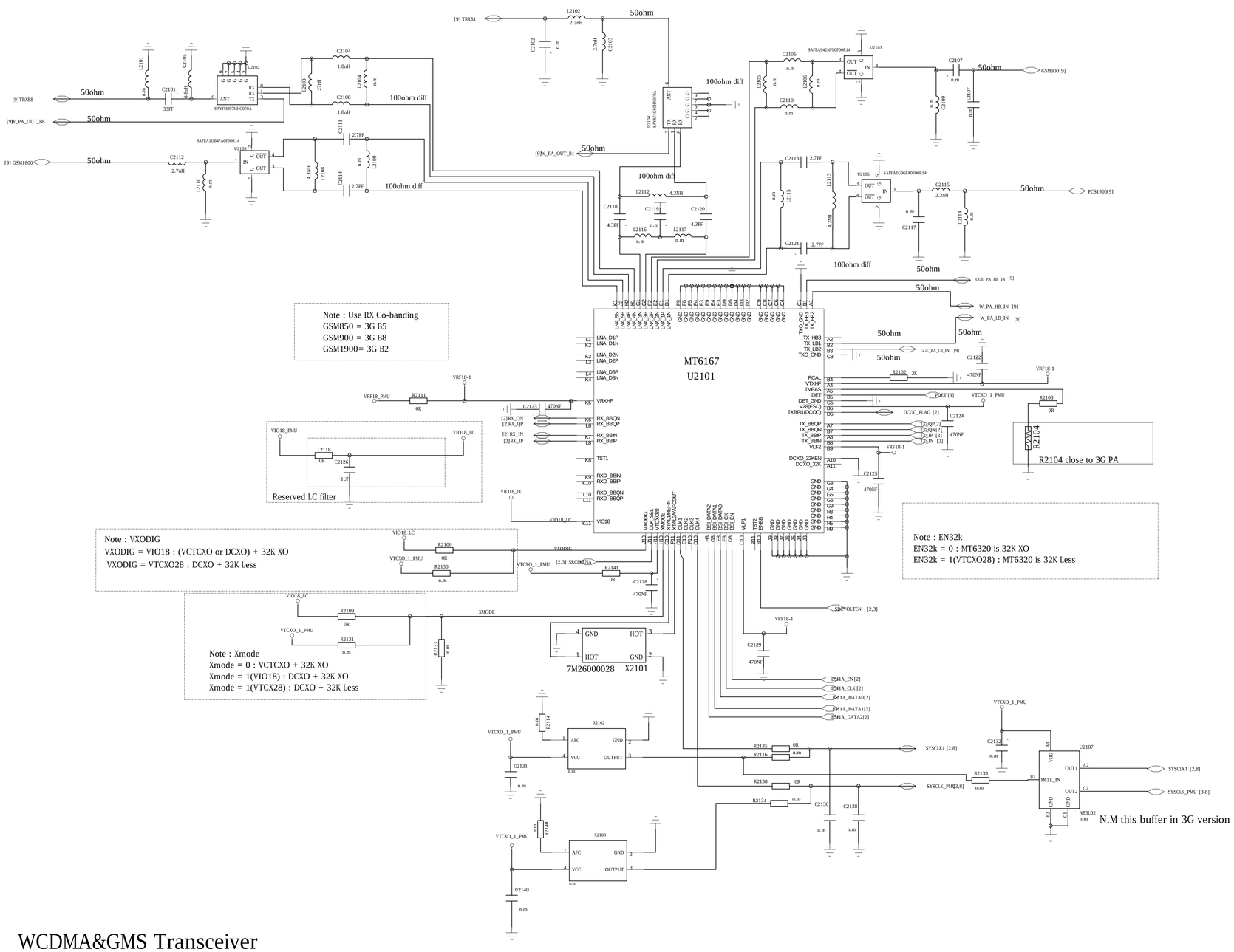

COMPANY:			
TITLE:			
DRAWN:	DATED:		
CHECKED:	DATED:	CODE:	SIZE:	DRAWING NO:	REV:
QUALITY CONTROL:	DATED:				
RELEASED:	DATED:				
SCALE:		SHEET: OF			

REVISION RECORD			
LTR	ECO NO:	APPROVED:	DATE:

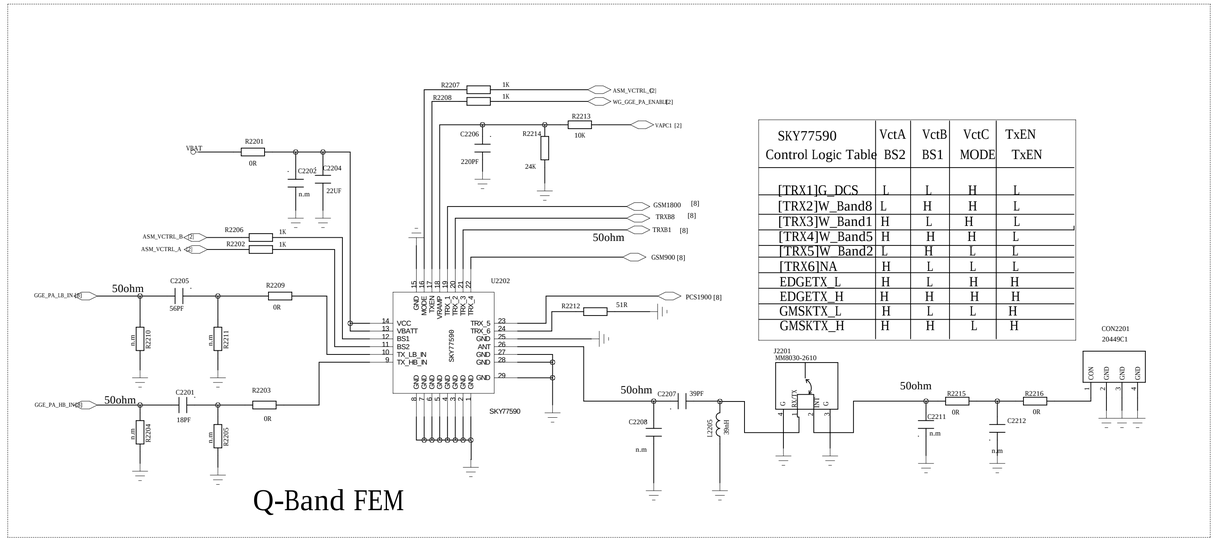

SKY77590 Control Logic Table	VctA BS2	VctB BS1	VctC MODE	TxEN TxEN
[TRX1]G_DCS	L	L	H	L
[TRX2]W_Band8	L	H	H	L
[TRX3]W_Band1	H	L	H	L
[TRX4]W_Band5	H	H	H	L
[TRX5]W_Band2	L	H	L	L
[TRX6]NA	H	L	L	L
EDGETX_L	H	L	H	H
EDGETX_H	H	H	H	H
GMSKTX_L	H	L	L	H
GMSKTX_H	H	H	L	H

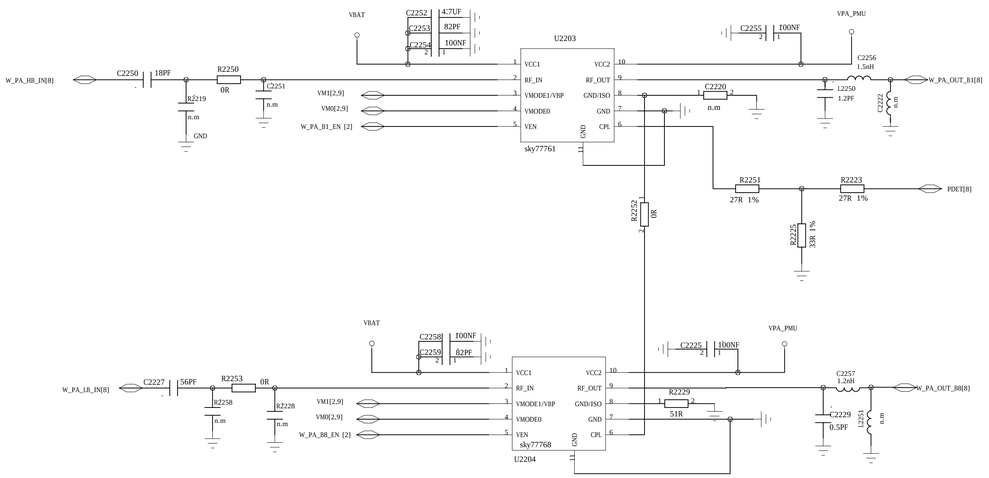

DRAWN: 1	DATED:	COMPANY:	
CHECKED:	DATED:	TITLE:	
QUALITY CONTROL:	DATED:	CODE: / SIZE: / DRAWING NO:	REV:
RELEASED:	DATED:	SCALE:	SHEET: OF

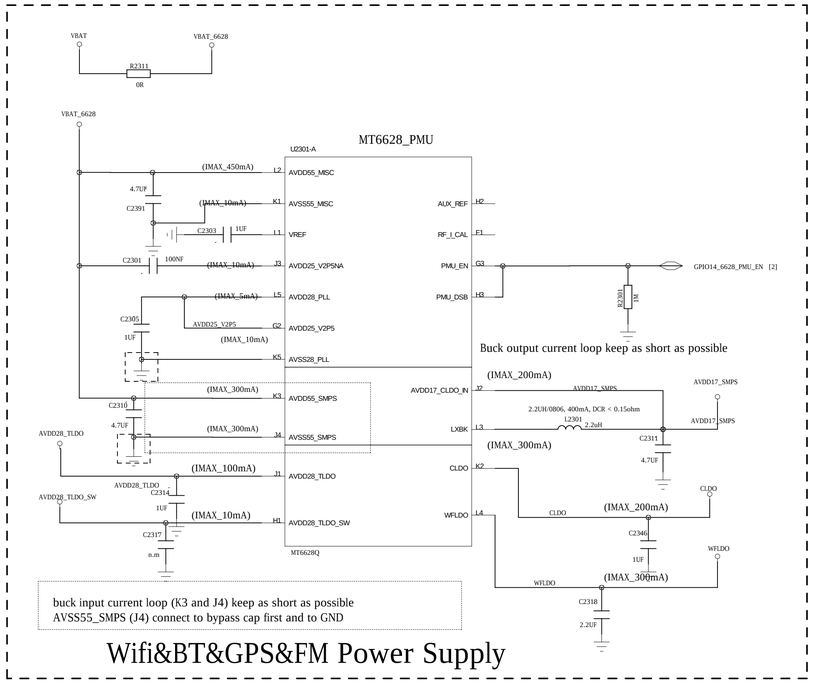

Wifi&BT&GPS&FM Power Supply

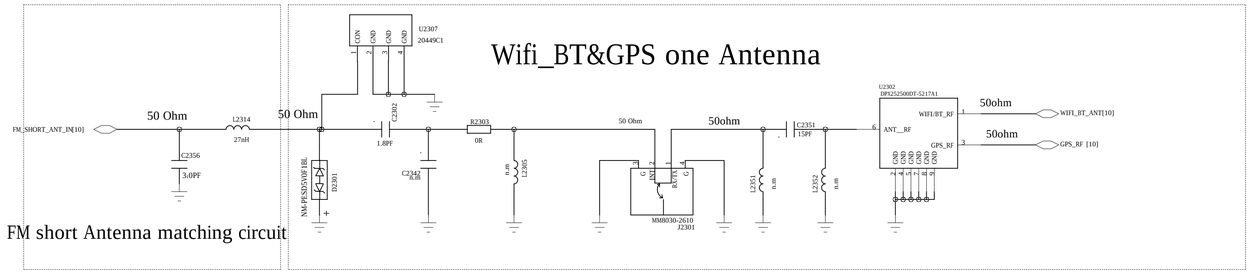

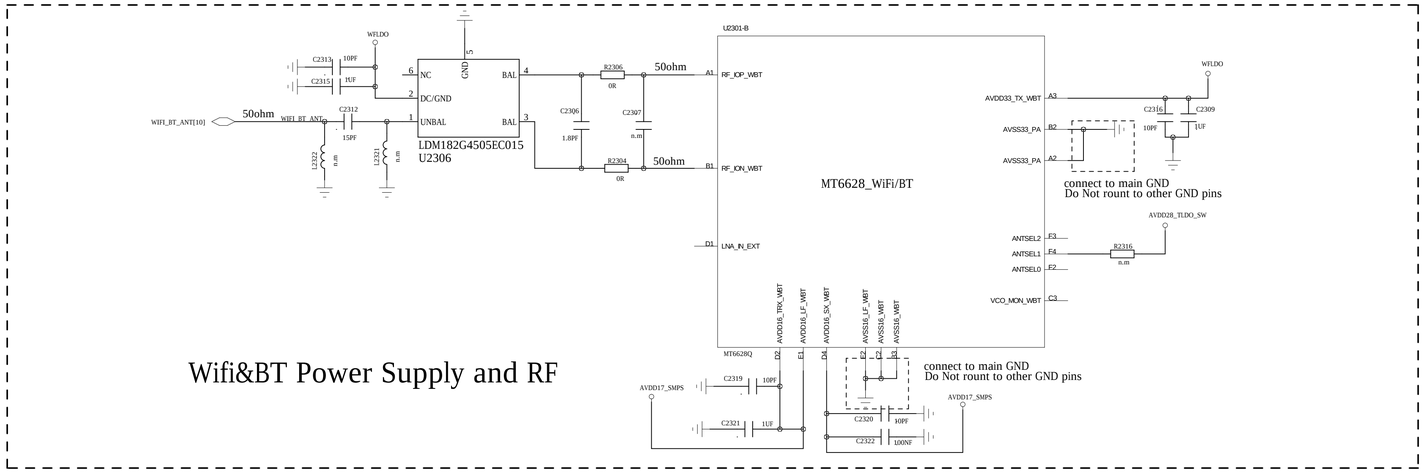

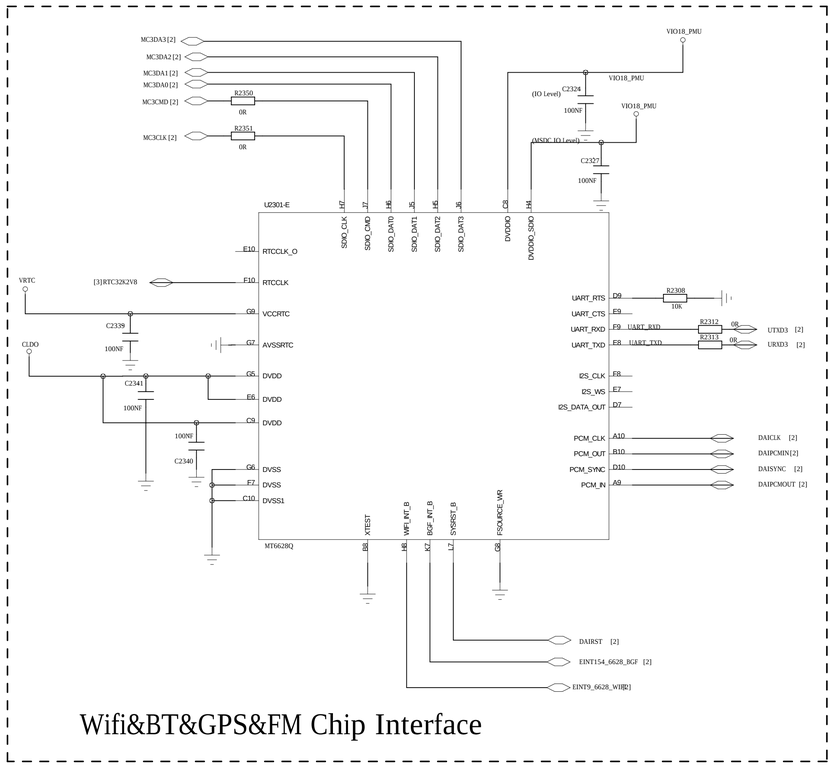

Wifi&BT&GPS&FM Chip Interface

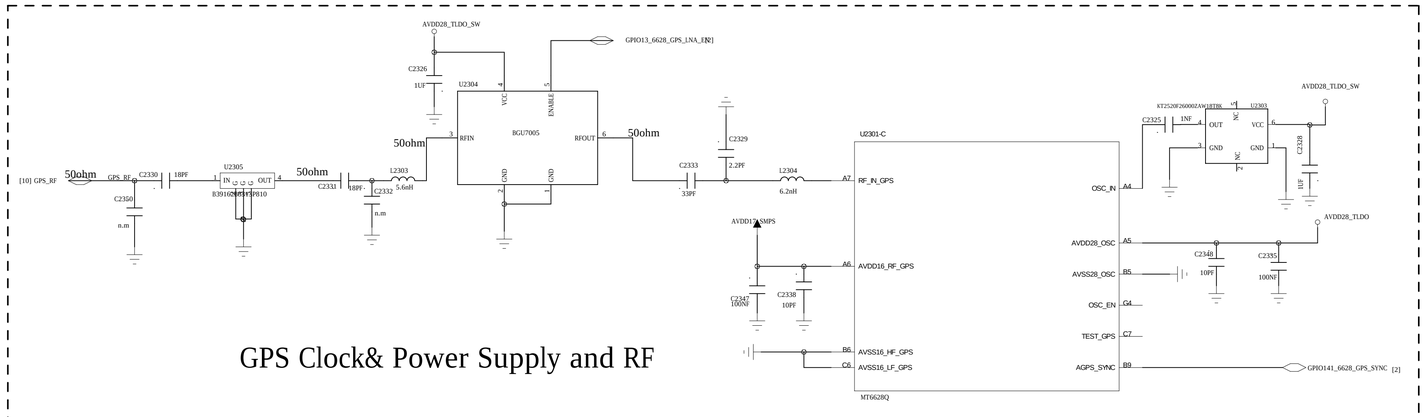

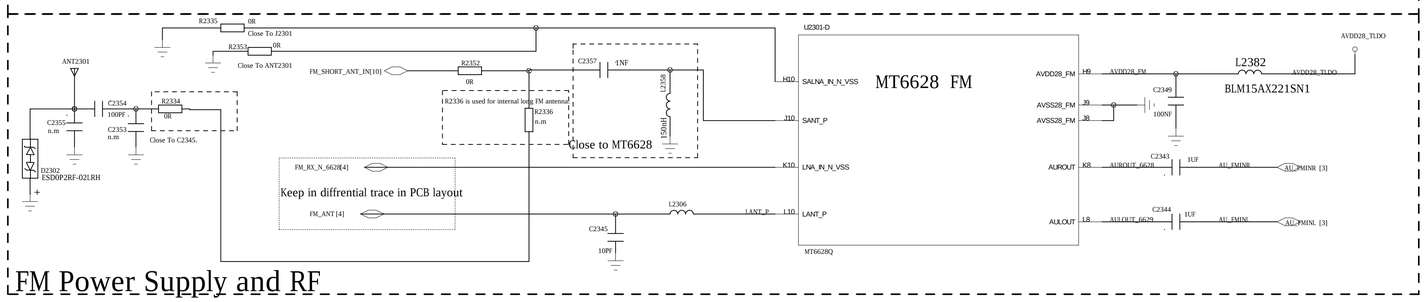

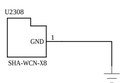

REVISION RECORD			
LTR	ECO NO:	APPROVED:	DATE:

DRAWN:	DATED:	COMPANY:			
		TITLE:			
CHECKED:	DATED:	CODE:	SIZE:	DRAWING NO:	REV:
QUALITY CONTROL:	DATED:				
RELEASED:	DATED:	SCALE:		SHEET: OF	